Acme Sanitary Ware Co. Ltd.
1/F, Acme Building, 22-28 Nanking Street, Kowloon, Hong Kong
Tel: 2388 7171 Fax: 2710 8012
Email: acme@acmesanitary.com.hk
Website: www.acmesanitary.com.hk
Since 1949

WDI SMART WATER

PROJECT		REF		REV	ITEM CODE	
LOCATION		DATE			PAGE	

SANITARY WARE SPECIFICATION SHEET

Item Descriptions	WDI (PRC) Wall-hung watercloset frame only, without HDPE WC outlet bend, without flush pipe, without concealed cistern
Dimensions	L500 x W150 x H520 mm
Model	K501-L2
Manufacturer	WDI (PRC)
Supplier	Acme Sanitary Ware Co. Ltd Mr. Eric Wong/ Mr. Wilson Hung
Contact Tel/Fax	(852) 2388-7171 / (852) 2710-8012
E-mail	acme@acmesanitary.com.hk
Website	www.acmesanitary.com.hk

Illustration/ Drawing



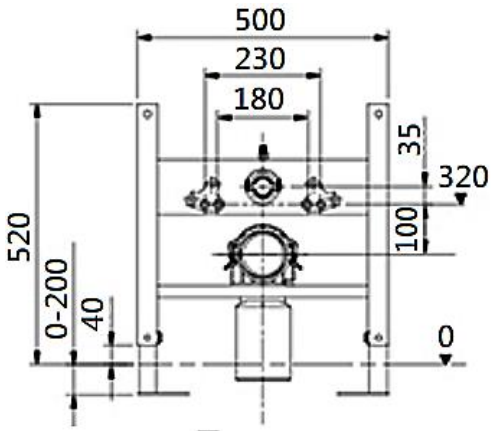

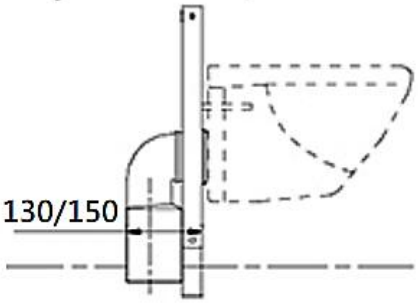

Application
- For dry wall or solid wall installation
- For wall-hung toilet, fasten distance 180mm or 230mm
- For a floor construction of 0~200 mm

Scope of delivery
- Support frame
- Discharge bend clip component
- Discharge bend component (optional)
- M12 fixation rods for toilet
- Fasten materials

Coding information

Product code	Description
K501-L2-YYB1	K501 support frame ; 520mm With D110, PVC discharge bend
K501-L2-YYB2	K501 support frame; 520mm With D110, HDPE discharge bend
K501-L2-YYB3	K501 support frame; 520mm With D90/D110, HDPE discharge bend

Note:

** All information of the above is for the reference only. No prior notice is made if any changes.*

Installation

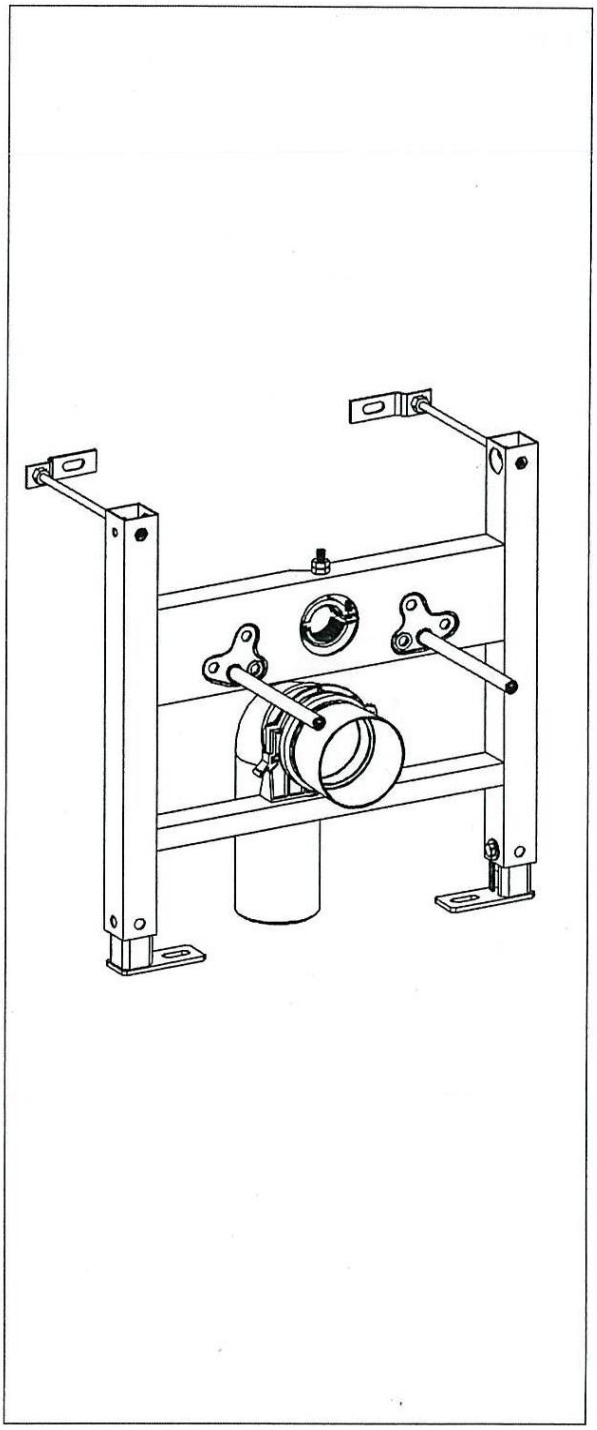

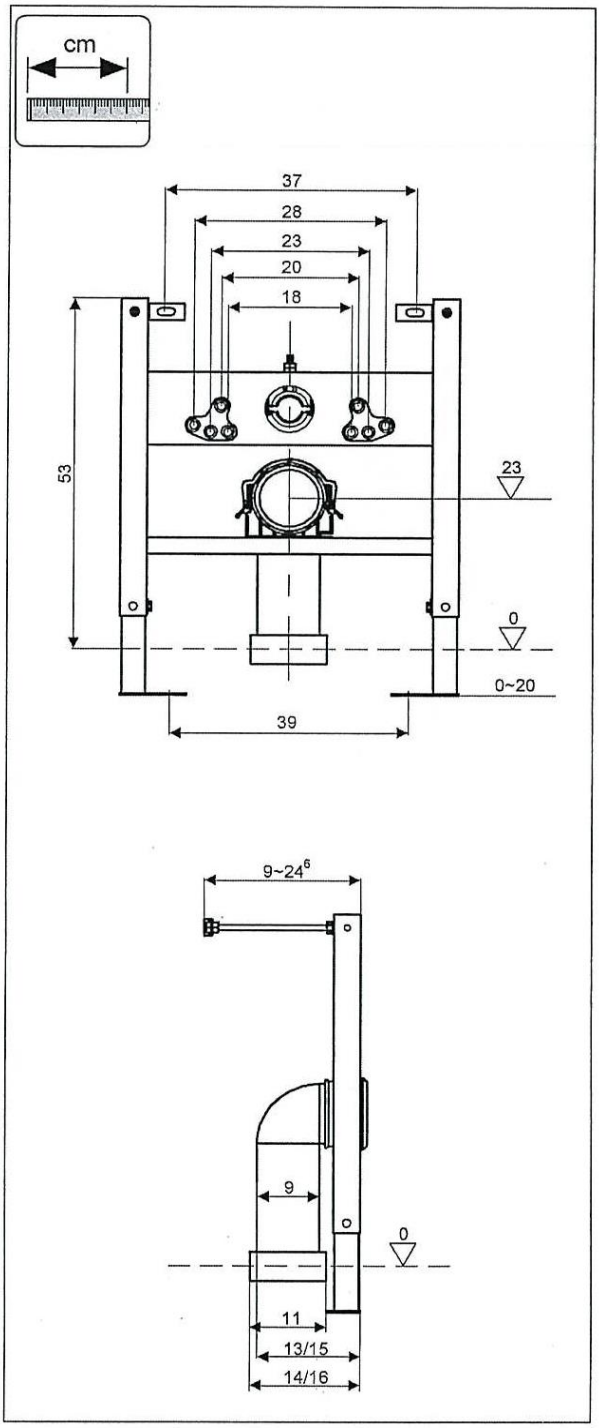

560337 14-1.0

Installation

